QUADRA PLUS
FREE STANDING

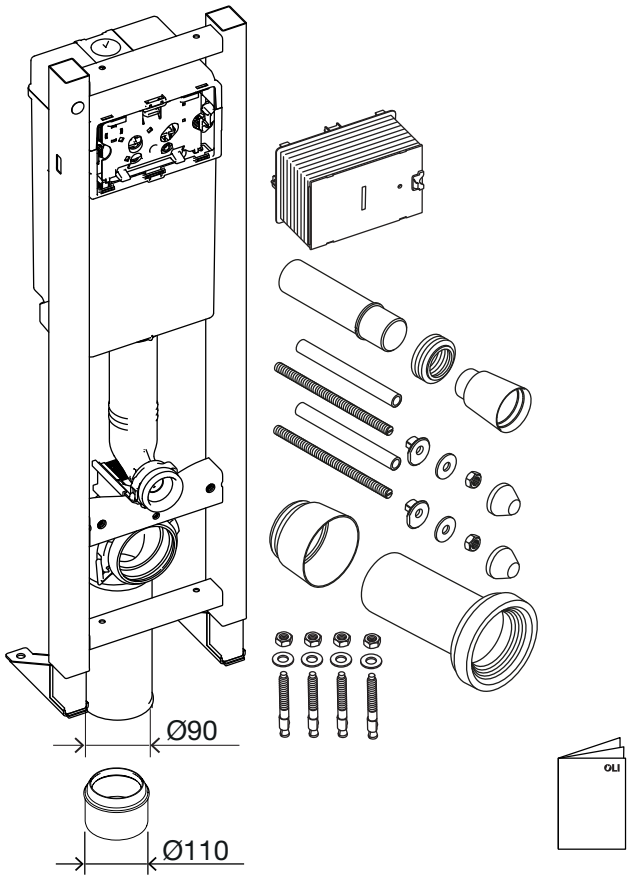

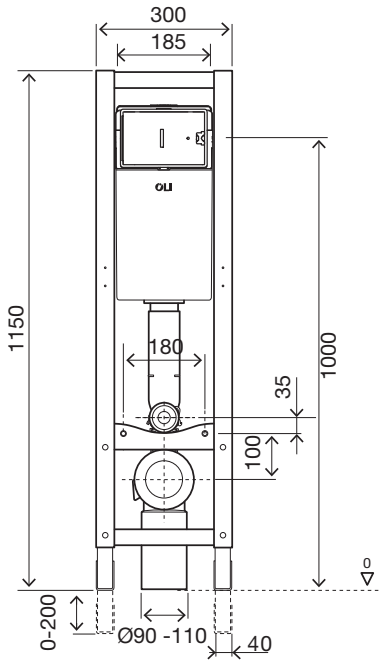

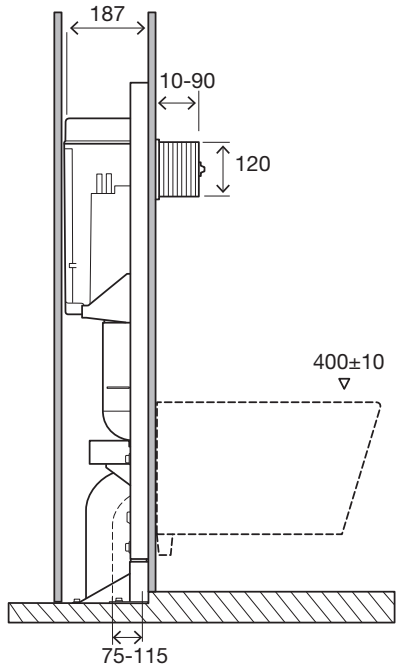

(dimensions in millimeters)

1

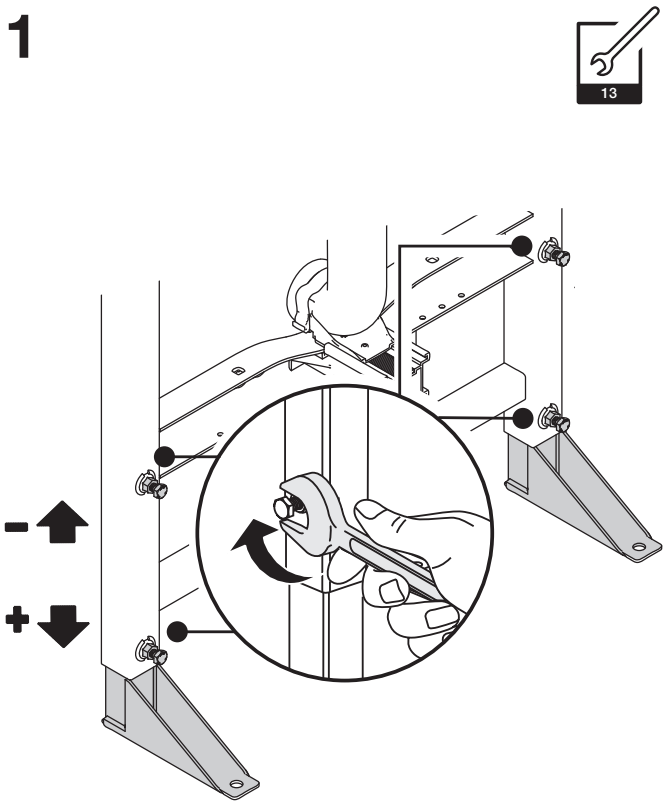

2

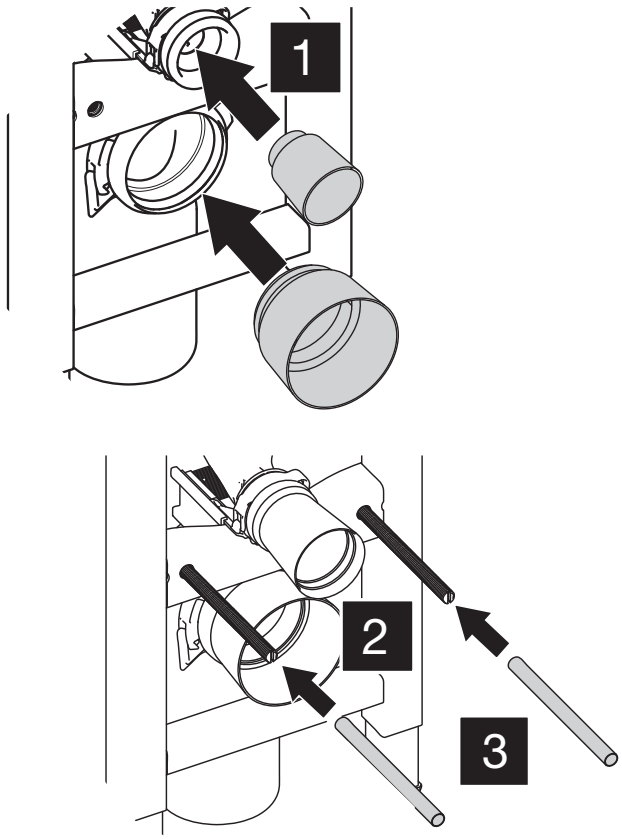

www.oli-world.com

comercial@oli-world.com | info@olisrl.it

AC10000879242.1

3

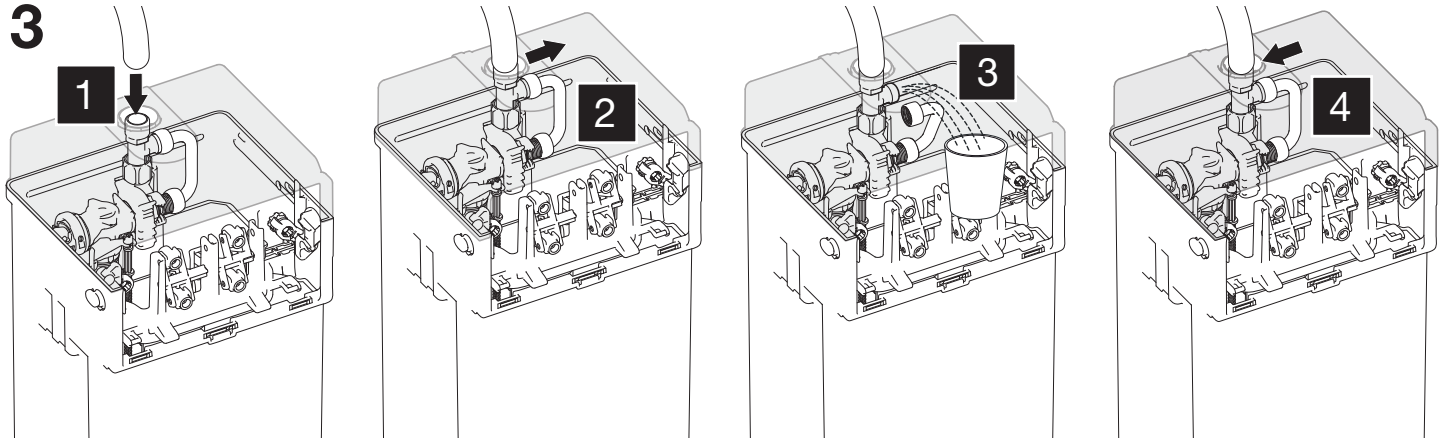

4

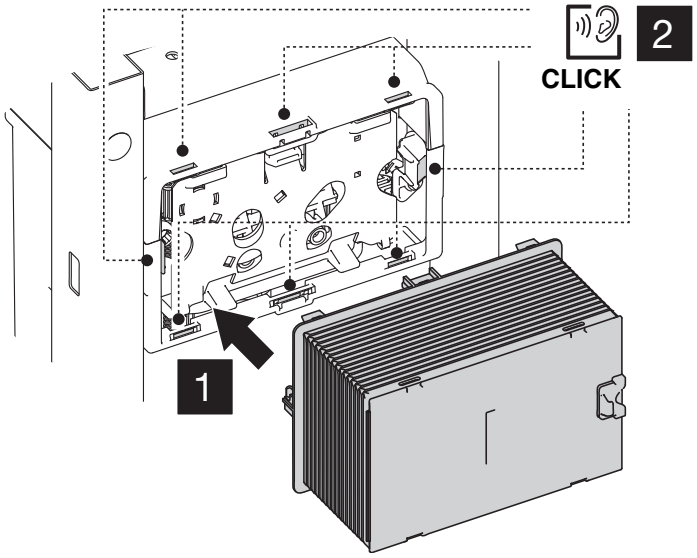

5

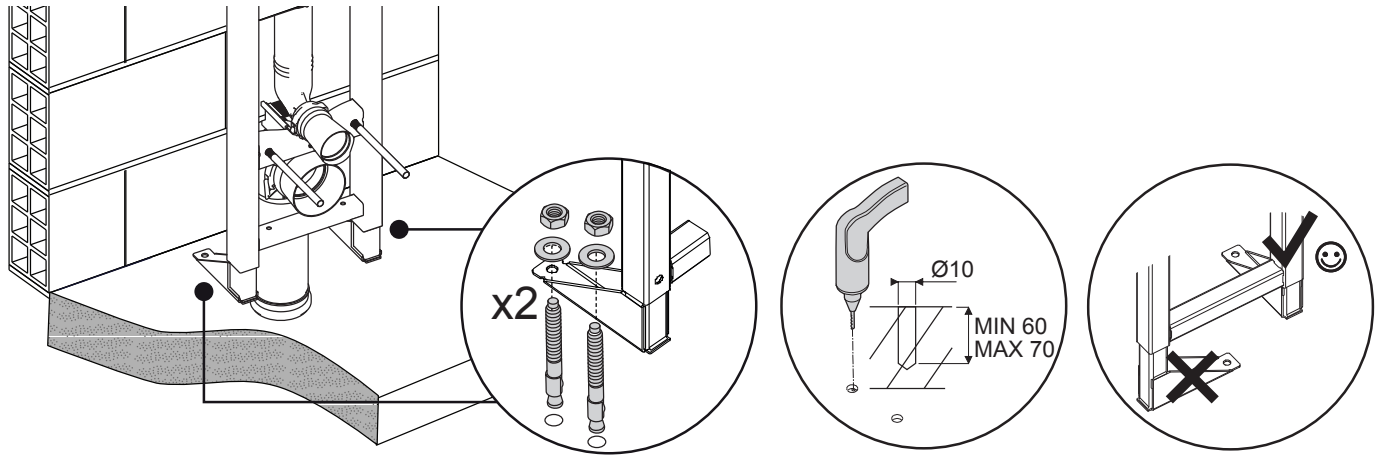

www.oli-world.com

comercial@oli-world.com | info@olisrl.it